NOTES:
1. Color: Black
2. Lubricant: SHELL OMALA 150
3. Accessory: Metal Vent Oil Plug: 3/8"PT 1pc

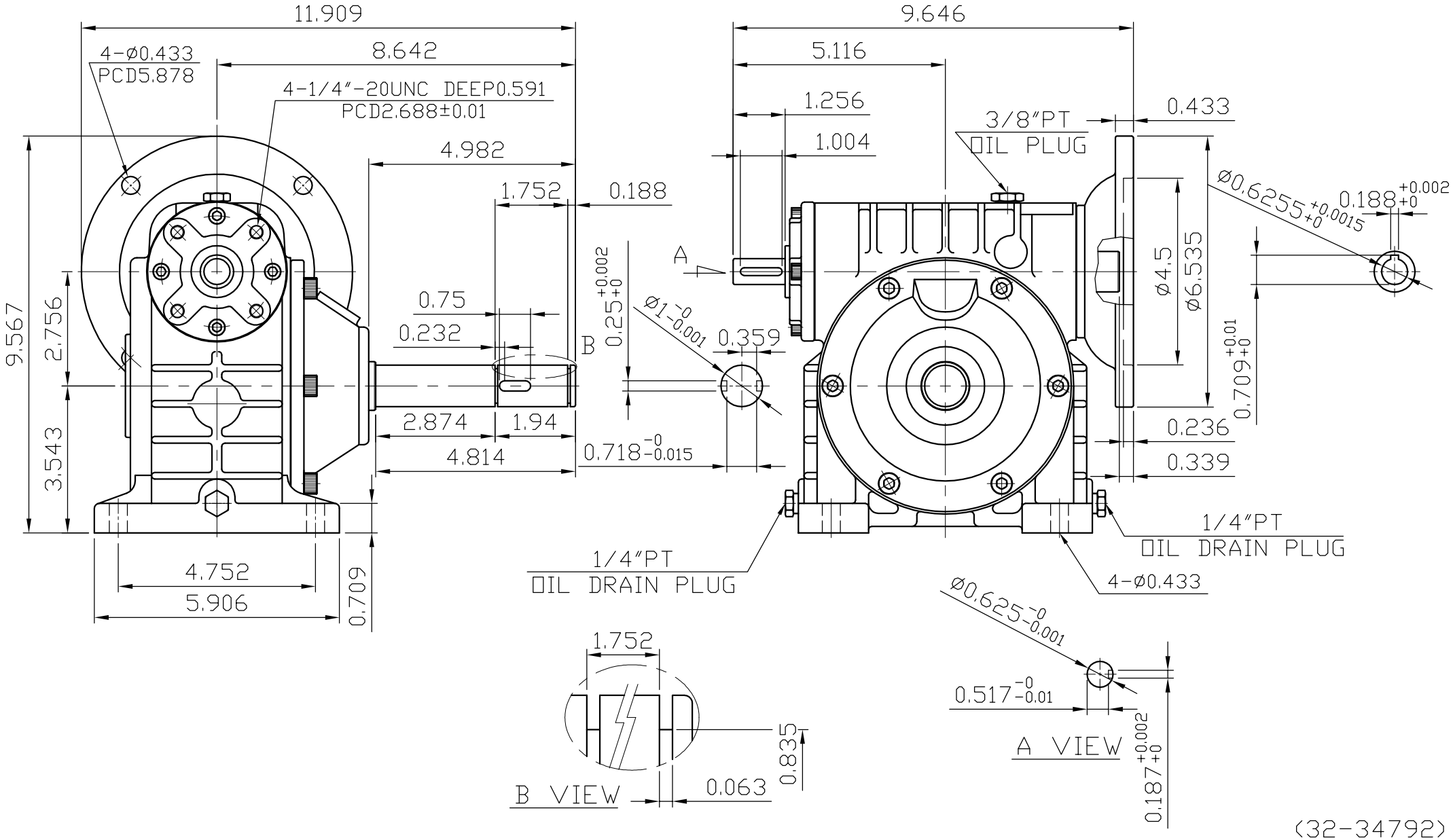

(32-34792)